Sport Entries

Interface Description Document

Vancouver 2010 Olympic and Paralympic Winter Games

4 Nov 2011

Reference: M18363478-1.6 APP

Atos
Major Events
Diagonal 210-218
08018 Barcelona
Spain

© Copyright IOC, 2011
This document has been produced by Atos Origin and it is the property of the IOC. This document, either in whole or in part, must not be reproduced or disclosed to others or used for purposes other than as agreed pursuant to the IOC / ATOS ORIGIN GROUP Master Information Technology Agreement N.2. Atos Origin must not be considered liable for any mistake or omission in the edition of this document. Atos and fish symbol, Atos Origin and fish symbol, Atos Consulting, and the fish symbol itself are registered trademarks of Atos Origin SA.

Document control

Version history

Version	Date	Comments
1.0	26 Oct. 2007	First version
1.1	9 Nov. 2007	
1.2	20 Nov. 2007	
1.2	29 Nov. 2007	APP Version
1.3	22 May 2008	
1.4	17 Oct 2008	
1.5	16 Feb 2008	
1.6	4 Nov 2011	Youth Olympic Games - Innsbruck 2012 adaptations

Issue Control

Owner: Eduard Carreras, Luis Maldonado

Reviewed by VME: Xavier Arnaus, Peter Hamilton.

Reviewed by VANOC: Slobodan Delic

Reviewed by OVR: Christian Schleter, Enrico Richter and Francesco DeRose.

Approved by: Natalia Ferrer

Signature:

Date:

Distribution: Major Events

File reference: Published in Livelink

© IOC, 2011

Change Log

Version	Status	Changes on version
1.0	SFR	• First version.
1.1	SFR	• Changes from DRF from VME
1.2	SFR	• Changes from DRF from CU Omega
1.3	APP	• Modified sections 3.1.4, 3.1.5, 3.2.4, 3.2.5, 4.1.4, 4.1.5, 4.2.4 and 4.2.5 to include *City_Of_Birth* and *City_Of_Residence* for X01 and X02 messages, CRS to OVR and OVR to CRS.
1.4	APP	• Modified sections 3.1.4, 3.1.5,to add the *Guide* for X01 messages, CRS to OVR and OVR to CRS.
1.5	APP	• Modified sections to fix defect 2499.
1.6	APP	• Youth Olympic Games - Innsbruck 2012 adaptations

© IOC, 2011

Table of contents

Section *Page*

1 Introduction ... 7

1.1 This document ... 7

1.2 Objective ... 7

1.3 Main audience ... 7

1.4 Glossary ... 7

1.5 Related Documents ... 8

1.6 Overall Perspective ... 8

1.7 Objective ... 8

1.8 End to end Data Flow ... 8

1.9 Operation modes ... 9

1.10 Periods of attended and unattended operations ... 9

1.11 IT Departments' support functions ... 9

1.12 Backup and recovery ... 10

1.13 Disaster Recovery ... 10

2 Interface Description ... 11

2.1 Used Conventions ... 11

2.2 From OVR point of view (OVR – CRS) ... 12
2.2.1 Description ... 12
2.2.2 Rules for the Interface ... 12
2.2.3 Parameters ... 12
2.2.4 Exceptions ... 13
2.2.5 Functional conditions for the interface ... 13
2.2.6 Frequency/Triggers ... 13
2.2.7 Expected Results ... 13

2.3 From the CRS point of view *(CRS – OVR)* ... 13
2.3.1 Description ... 13
2.3.2 Rules for the Interface ... 13
2.3.3 Parameters ... 14
2.3.4 Exceptions ... 14
2.3.5 Functional conditions for the interface ... 14
2.3.6 Frequency/Triggers ... 14
2.3.7 Expected Results ... 14

3 Messages from CRS to OVR ... 15

3.1 X01 Athletes ... 15
3.1.1 General Description ... 15

© IOC, 2011

3.1.2 Header Values 15
3.1.3 Trigger and Frequency 16
3.1.4 Message Structure 16
3.1.5 Message Values 17

3.2 X30 Teams 18
3.2.1 General Description 18
3.2.2 Header Values 19
3.2.3 Trigger and Frequency 19
3.2.4 Message Structure 20
3.2.5 Message Values 20

4 Messages sequence 22

4.1 Data maintenance 22

5 Constraints Requirements 23

6 Annex I - DTD Files 24

© IOC, 2011

1 Introduction

1.1 This document

This document describes the current understanding of the data and processes associated to the entries interface.

The sections that follow describe in detail the structure of the exchanged messages. Use case descriptions are provided to illustrate the use of the interface. The validity of use cases for athletes, event participation and officials is subject to the current understanding of the operational procedures for the Games.

Examples are provided for all messages (outside this document). If there were discrepancies between the examples and the definitions of the messages, the definitions would be assumed as valid.

Wherever there is an attribute that makes reference to Registration Number, it will be assumed that it refers to Athlete/Official ID.

1.2 Objective

The objective of this document is to provide the basis for the implementation of the interfaces between the CRS systems.

1.3 Main audience

The main audience of this document is the systems application user representatives for acceptance, the Information Services team for testing purposes and the development teams for development.

1.4 Glossary

Name	Abb.	Description
Central Repository System	CRS	The system that manages the main repository of information for Info Diffusion Systems.
Info	INFO	Info is the web application for the distribution of information to the Olympic Family and Media.

© IOC, 2011

Name	Abb.	Description
Info Diffusion System	IDS	This is the name of the project that comprises all the systems responsible for centralized Information Diffusion, i.e. WNPA Distribution, Print Distribution and INFO.
On Venue Results	OVR	Omega systems, placed at the venues, responsible for the collection of competition results, and their distribution. They distribute results in the venue itself (scoreboard, TV) and outside the venue (to the IDS systems)
XML Message Generator	XMG	Subsystem of CRS responsible for generating outgoing information (XML messages).
Data Storage and Processing	DSP	Subsystem of CRS responsible for receiving incoming information (XML messages).

1.5 Related Documents

Reference	Description
M18399963	IDS Sport Entries Interface Description Document

1.6 Overall Perspective

1.7 Objective

The objective is to exchange information between OVR and CRS Systems correctly and at an expected frequency.

1.8 End to end Data Flow

The OVR system feeds XML messages into the IDS system by sending them to the Local Gateway Server via OVTP. The Local Gateway Server is responsible of redirecting all OVR messages intended to CRS to the CRS server through a QP queue.

The DIO/DSP processes inside CRS System receive the messages and consolidate the information into the IDS database.

© IOC, 2011

XMG is the CRS subsystem that generates the XML messages intended for OVR. XMG sends these messages through a QP queue to the LGW server in the venue. The LGW Server sends these messages to the OVR provider via OVTP.

Figure 1.1 shows the relations between the different items involved in the process and how they communicate with the others.

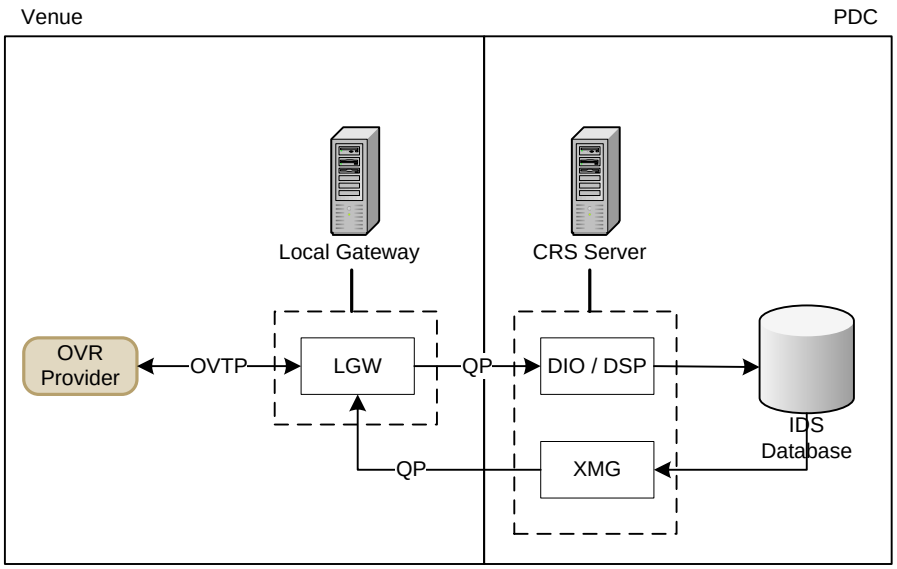

Figure 1.1 - OVR-CRS Interface Architecture

1.9 Operation modes

All systems being described in this document should be able to operate in testing mode and in production mode. A testing environment should be kept during the operation stage, and under some circumstances it may be useful to test some data prior to sending it to the operation environment.

Besides, some previous initialization mode may be necessary in order to get all the required parameters initialized.

1.10 Periods of attended and unattended operations

N/A

1.11 IT Departments' support functions

N/A

© IOC, 2011

1.12 Backup and recovery

N/A

1.13 Disaster Recovery

N/A

© IOC, 2011

2 Interface Description

2.1 Used Conventions

For the section Values, describing the body of each message, the following convention has been used:

Literal values or exhaustive enumeration of all possible values are written in normal font.

Sample values or value description are written in italic font.

The Values of each message is described in a table with a header like this one:

Elements	Attribute	Format	Explanation Possible Values	Required

All the columns of the table make reference either to “Element”, either to “Attribute”, so this are the two main columns of the table.

“Attribute” will hold the attributes of “Element”, if any. There will be as many rows as attributes the element has.

For the format of attributes the following conventions have been used:

C(n): Char (fixed length of n characters)

VC(n): Char (variable length up to n characters)

N(n): Numeric (fixed length of n digits)

VN(n): Numeric (variable length up to n digits)

D: Date (date value in the format YYYYMMDD)

T: Time (time value in the format HHMMssmmm)

Column “Required” makes reference always to “Attribute”. It could have been called “Attribute Required”. It has values Y or N to indicate whether or not the attribute is required for the element it belongs to.

© IOC, 2011

2.2 From OVR point of view (OVR – CRS)

2.2.1 Description

The OVR system main business is>

- To generate XML messages in a proper manner, at a correct frequency and send them correctly to allow CRS to process them accordingly.
- To correctly process XML messages generated and sent by CRS System

2.2.2 Rules for the Interface

There are some rules that any message included at this document must follow.

2.2.2.1 Message Structure, Encoding and Document Type

The message structure and the encoding should follow the specified in the latest version of the IDS Global interface description.

The document type will be:

<!DOCTYPE Message PUBLIC "-//IDS//CRS" "ids/oris+/crs/main.dtd">

2.2.2.2 The RSC tag

For all messages coming from OVR and processed by CRS that includes the RSC tag, the tag must validate the following rule:

RSC TAG = String Concatenation of (Discipline tag, Gender tag, Event tag, Phase tag, Event Unit tag)

2.2.2.3 Identifiers

At every message coming from OVR and processed by CRS that includes an Athlete or Official ID, this ID must be provided as a number without leading zeros or blanks.

Example:

```
Registration_Number="123"

(not Registration_Number="0000123" or Registration_Number="    123" )
```

2.2.3 Parameters

N/A

© IOC, 2011

2.2.4 Exceptions

The OVR system generating messages should maintain log files in order to track any possible error caused by the software generating the messages, or by any other reason such as hardware failure, disk full, network communications, etc.

2.2.5 Functional conditions for the interface

N/A

2.2.6 Frequency/Triggers

Messages will be sent by OVR, at least, with the frequency for each message, as stated afterwards in this document.

2.2.7 Expected Results

Messages are being generated appropriately and correctly sent to the Local Gateway server at an appropriate frequency.

Messages have a correct structure and content.

2.3 From the CRS point of view *(CRS – OVR)*

2.3.1 Description

The CRS system main business is:

- To generate XML messages in a proper manner, at a correct frequency and send them correctly to allow OVR to process them accordingly.
- To correctly process XML messages generated and sent by OVR systems.

2.3.2 Rules for the Interface

There are some rules that any message included at this document must follow.

2.3.2.1 Message Structure, Encoding and Document Type

The message structure and the encoding should follow the specified in the latest version of the IDS Global interface description.

The document type will be:

<!DOCTYPE Message PUBLIC "-//IDS//CRS" "ids/oris+/crs/main.dtd">

© IOC, 2011

2.3.2.2 The RSC tag

For all messages coming from CRS and processed by OVR that includes the RSC tag, the tag must validate the following rule:

RSC TAG = String Concatenation of (Discipline tag, Gender tag, Event tag, Phase tag, Event Unit tag)

2.3.2.3 Identifiers

At every message coming from CRS and processed by OVR that includes an Athlete or Official ID, this ID must be provided as a number without leading zeros or blanks.

Example:

```
Registration_Number="123"

(not Registration_Number="0000123" or Registration_Number="    123" )
```

2.3.3 Parameters

N/A

2.3.4 Exceptions

For the message X24 (historical records) the document type will be:

<!DOCTYPE Message PUBLIC "-//IDS//BCK" "ids/oris+/crs/HR.dtd">

2.3.5 Functional conditions for the interface

N/A

2.3.6 Frequency/Triggers

Messages will be sent by OVR, at least, with the frequency for each message, as stated afterwards in this document (section 3).

2.3.7 Expected Results

Messages are being generated appropriately and correctly sent to the Local Gateway server at an appropriate frequency.

Messages have a correct structure and content, as specified in section 3.

© IOC, 2011

3 Messages from CRS to OVR

3.1 X01 Athletes

3.1.1 General Description

This message contains information about athletes and the inscription of one athlete to the event/events the athlete is participating in.

Regarding the Athletes messages, the communication between CRS and OVR is bidirectional. There is an initial bulk load of Athletes from CRS (XMG) to OVR, and afterwards, OVR should keep the information in CRS up to date through the Athletes messages being sent from OVR to CRS (DSP).

This section will only describe the message sent from CRS to OVR.

CRS will send information to each OVR provider about the athletes that have associated a discipline maintained by that OVR provider.

3.1.1.1 Use Cases Description

3.1.1.1.1 Initial load (ATH_1)

Before the start of the competition, CRS will send to OVR the data of the athletes depending on their discipline. The message contains one *OVRCRS_Athlete_List* element per athlete transmitted.

3.1.2 Header Values

Below are described the values that have to be produced in the use case ATH_1.

Attribute	Values	Comment
Category	ATH[1]	Athletes from the Central Repository System
Origin	*Machine ID*	Unique WAN identification of the machine that has produced the message, the CRS Server in this case (i.e. *pdc-didssvx-001*)
Serial	*1… ∞*	CRS feed counter
RSC	*DD*0000000 Examples:	Discipline+zeroes. Only discipline applies

[1] Please, be aware that the category in this message is different from the category of the message sent by OVR

© IOC, 2011

Attribute	Values	Comment
	*AR*0000000 *AT*0000000	
Discipline	*AR*, *AT*, …	Discipline for which the athletes' data bulk load is done
Gender	0	Fixed value
Event	000	Fixed value
Phase	0	Fixed value
Unit	00	Fixed value
Venue	999	Fixed value
Type	X01	Athlete data message. Fixed value
Format	D	Data. Fixed value
Version	*1..N*	Version number of the message
Correction	*0..N*	Correction number of the message
Language	ENG	Body contents language. Fixed value
Date	*Date value* *YYYYMMDD*	Date in which the message is generated
Time	Time value *HHMMSSmmm*	Time in which the message is generated

3.1.3 Trigger and Frequency

This message is sent only once, when each OVR system starts operation at venue.

3.1.4 Message Structure

OVRCRS_Athlete_Lists (1)
OVRCRS_Athlete_List (1..N)
Registration_Number
Modification_Indicator
Family_Name
Given_Name
DOB
WNPA_Given_Name
WNPA_Family_Name
TV_Short_Name
TV_Long_Name
Initial_Name
Reporting_Name
Gender_ID
City_Of_Birth
Country_Of_Birth
City_Of_Residence
Country_Of_Residence
Height
Weight
Nationality
Organization_ID
Registration_Status

© IOC, 2011

Athlete_Discipline (1)
Discipline_ID
IF_Number
Athlete_Event (0..N)
Gender
Event
Guide
(Entries attributes)

3.1.5 Message Values

Element	Attribute	Format	Explanation Possible Values	Required
OVRCRS_Athlete_List	Registration_Number	VC(7)	Athlete identifier	Y
	Modification_Indicator	C(1)	Operation type Null (not informed). In the message that CRS sends to OVR this attribute is not applicable.	N
	Family_Name	VC(25)	Preferred Family name	Y
	Given_Name	VC(25)	Preferred Given name	N
	DOB	D	Date of birth *YYYYMMDD*	N
	WNPA_Given_Name	VC(25)	WNPA given name	N
	WNPA_Family_Name	VC(25)	WNPA family name	Y
	TV_Short_Name	VC(18)	TV Short Name	Y
	TV_Long_Name	VC(35)	TV Long Name	Y
	Initial_Name	VC(18)	Initial Name	Y
	Reporting_Name	VC(35)	Reporting Name	Y
	Gender_ID	C(1)	Gender code M *(for man) or* W *(for woman)*	Y
	City_Of_Birth	VC(40)	Athlete's city of Birth *In mixed case*	N
	Country_Of_Birth	C(3)	Athlete's country of birth code *Country code*	N
	City_Of_Residence	VC(40)	Athlete's city of residence *In mixed case*	N
	Country_Of_Residence	C(3)	Athlete's country of residence *Country code*	N
	Height	N(3)	Athlete's height in centimeters	N
	Weight	VN(3)	Athlete's weight in kilograms	N
	Nationality	C(3)	Athlete's nationality *Country code*	Y
	Organization_ID	C(3)	Athlete's NOC *NOC code*	Y
	Registration_Status	VC(6)	Registration Status ACCRED,	Y

© IOC, 2011

Element	Attribute	Format	Explanation Possible Values	Required
			CANCEL	
Athlete_Discipline	Discipline_ID	C(2)	Athlete's discipline code *Sport discipline code. It will be coincident with the discipline code in the header of the message.*	Y
	IF_Number	VC(16)	Athlete's international federation number	N
Athlete_Event	Gender	C(1)	Gender code of the event the athlete participates in M, W *or* X.	Y
	Event	C(3)	Event code of the event the athlete participates in.	Y
	Guide	VC(7)	*Identifier of the guide (only for Paralympic)*[2]	N
	(Entries attributes)[3]	*Check*	*There will be one attribute per entry required for a specific event. Each attribute required is described in the IDS Sport Entries Interface Description Document for the corresponding discipline.* *Not needed if not applicable.* *In the message from CRS, many of these entries may be not known, yet.*	N

3.2 X30 Teams

3.2.1 General Description

This message contains information about teams.

Regarding to the Teams messages, the communication between CRS and OVR is bidirectional. There is an initial Teams bulk load from CRS (XMG) to OVR, and afterwards, OVR should keep the information in CRS up to date through the Teams messages being sent from OVR to CRS (DSP).

This section will only describe the message sent from CRS to OVR.

CRS will send information to each OVR provider about the teams associated to the discipline maintained by that OVR provider.

[2] Guides will be sent as Officials through X02 messages

[3] For each discipline, check the attributes that are required to be sent in the IDS Sport Entries Interface Description Document. It can be either sent an attribute with a NULL value or not sent, if this attribute does not apply for a discipline.

© IOC, 2011

3.2.1.1 Use Cases Description

3.2.1.1.1 Initial load (TEA_1)

Before the start of the competition, CRS will send to OVR the data of the teams participating in one discipline. The message contains one *OVRCRS_Team_List* element per team transmitted.

3.2.2 Header Values

Below are described the values that have to be produced in the use case TEA_1.

Attribute	Values	Comment
Category	TEM[4]	Teams from the Central Repository System
Origin	*Machine ID*	Unique WAN identification of the machine that has produced the message, the CRS Server in this case (i.e. *pdc-didssvx-001*)
Serial	*1… ∞*	CRS generation counter
RSC	*DD*0000000 Examples: *AR*0000000 *AT0000000*	Discipline+zeroes. Only discipline applies
Discipline	*AT, BK, ...*	Discipline for which the teams‘ data bulkload is done
Gender	0	Fixed value
Event	000	Fixed value
Phase	0	Fixed value
Unit	00	Fixed value
Venue	999	Fixed value
Type	X30	Team data message. Fixed value
Format	D	Data. Fixed value
Version	*1..N*	Version number of the message
Correction	*0..N*	Correction number of the message
Language	ENG	Body contents language. Fixed value
Date	*Date value YYYYMMDD*	Date in which the message is generated
Time	*Time value HHMMSSmmm*	Time in which the message is generated

3.2.3 Trigger and Frequency

This message is sent only once, when each OVR system starts operation at venue.

[4] Please, be aware that the category in this message is different from the category of the message sent by OVR

© IOC, 2011

3.2.4 Message Structure

- OVRCRS_Team_Lists (1)
  - OVRCRS_Team_List (1..N)
    - *Team_ID*
    - *Discipline_ID*
    - *Gender*
    - *Event*
    - *NOC*
    - *Team_Number*
    - *(Entries attributes)*
    - *Delete*
    - Athlete_List (0..N)
      - *ID*
    - Official_List (0..N)
      - *ID*
      - *Position*

3.2.5 Message Values

Elements	Attribute	Format	Explanation Possible Values	Required
OVRCRS_Team_List	Team_ID	VC(7)	Team identifier, assigned by CRS	Y
	Discipline_ID	C(2)	Discipline code of the event where the team is participating *Sport discipline code. It will be coincident with the discipline code in the header of the message.*	Y
	Gender	C(1)	Gender code of the event where the team is participating M, W *or* X. *Gender code.*	Y
	Event	C(3)	Event code of the event where the team is participating *Event code.*	Y
	NOC	C(3)	NOC of the team *NOC code.*	Y
	Team_Number	N(1)	When a NOC inscribes just one team in one event this team must be numbered as 1. And when a NOC inscribes more than one team in the same event, those teams must be numbered differently, starting with 1 (1, 2 …). *1, 2, …*	Y

© IOC, 2011

Elements	Attribute	Format	Explanation Possible Values	Required
	(Entries attributes)[5]	*Check*	*Each attribute required is described in the IDS Sport Entries Interface Description Document*	*N*
	Delete	C(1)	Flag to indicate whether the team is being deleted or not Y – *to delete the team* N – *to not delete the team*	Y
Athlete_List	ID	VC(7)	Identifier of the athlete member of the team	Y
Official_List	ID	VC(7)	Identifier of the official member of the team	Y
	Position	VC(8)	Function of the official in the team *Officials / Team Officials function code.*	N

[5] For each discipline, check the attributes that are required to be sent in the IDS Sport Entries Interface Description Document. It can be either sent an attribute with a NULL value or not sent, if this attribute does not apply for a discipline.

© IOC, 2011

4 Messages sequence

4.1 Data maintenance

When each OVR starts operation, CRS sends the following messages containing the data centrally stored:

- X01 Athletes
- X30 Teams

© IOC, 2011

5 Constraints Requirements

N/A

© IOC, 2011

6 Annex I - DTD Files

This is the list of DTD files that describe the structure of the messages of this interface. Those DTD files should be present in any release of the interface, and are needed to validate the interface messages.

Needed DTD files for this interface
ids/oris+/crs/main.dtd
ids/oris+/crs/Entities.dtd
ids/oris+/crs/Globals.dtd
ids/oris+/crs/Athletes.dtd
ids/oris+/crs/Officials.dtd
ids/oris+/crs/Schedule.dtd
ids/oris+/crs/Teams.dtd
ids/oris+/crs/Horses.dtd
ids/oris+/crs/Results.dtd
ids/oris+/crs/Records.dtd

© IOC, 2011

© IOC, 2011